Mining dump truck BELAZ-75581
Payload capacity 90 tonnes (99 short tons)

Designed for transportation of rocks in severe technical conditions of deep mines, at open cast mining sites on technological roads under various climatic operating conditions (at ambient temperature range from -50 to +50 °C).

Engine

Model	CUMMINS QST30-C

Diesel four-cycle engine with V-type cylinders arrangement, electric control system, direct fuel injection, gas turbine charging and intermediate cooling of charged air.

Rated power @ 2100 rpm, kW (hp)	783 (1050)
Number of cylinders	12
Cylinders displacement, l	30
Cylinder diameter, mm	140
Piston stroke, mm	165.1
Specific fuel consumption, g/kW hr	202

Air cleaning is performed by three-stage filter with dry-type elements.
Exhaust gas expulsion is routed through dump truck body.
Circulation pressurized lubrication system with "wet" sump.
Single-loop fluid cooling system with forced circulation.
Oil cooling is performed through water-to-oil heat exchanger.
FLuid preheating system.
Starting system is actuated by electric starter.

Electric system voltage, V	24

Transmission

AC electric drive with traction alternator, two traction electric motors, motor-in-wheel reduction gears, auxiliary electric machines, adjustment and control devices.

Motor-in-wheel reduction gear ratio	30.36
Maximum travel speed, km/h	60

AC drive	KTE-90
Traction alternator	GST 700-8
Traction motor	TAD-9

Steering

Hydrostatic steering with steerable front wheels.

Steerable wheels turning angle, degrees	38
Turning radius, m	11
Overall turning diameter, m	24

Steering meets the requirements of ISO 5010.

Suspension

Conventional suspension for front and rear wheels. Cylinders are pneumohydraulic (nitrogen and oil).

Cylinder piston stroke, mm	
- front	260
- rear	210

Hydraulic system

Combined hydraulic system for body dumping gear, steering and brake actuator.
Body lifting cylinders are telescopic and three-stage with one stage of double action.

Body lifting time, s	19
Body lowering time, s	19
Maximum pressure in hydraulic system, MPa	16.5
Maximum pump delivery @ 2100 rpm, dm^3/min	464
Filtering degree, mcm	10

Tires

Pneumatic tubeless tires with quarry tread pattern.

Designation	27.00R49 or 31/90-49
Inflation pressure, MPa	upon recommendation of tire producer
Rim designation	19.50-49/4.0

Body

Bucket-type welded body with rops and heating by engine exhaust gases. Body is equipped with device for mechanical fixing in raised position, with rock-deflectors and rock-ejectors.

Body capacity, m³:	struck	heaped 2:1
	37.7	53.3 (standard)
	44.5	60.0 (option)
	75.0	93.0 (option)

Frame

High-strength low-alloyed steel welded frame with cast elements in places of maximum loading. Box-section variable height side rails are interconnected by cross-members.

Brakes

Braking system meets international safety requirements of ISO 3450 and consists of service, parking, auxiliary and emergency brakes.

Service brakes:

Front wheels - disk brake with two brake calipers per disk and automatic adjustment of gap in friction pair.

Rear wheels - disk brake with two brake gears per disk and automatic adjustment of gap in friction pair.

Brake disks are mounted on shafts of traction electric motors.

Brake actuator is hydraulic and separate for front and rear wheels.

Parking brake — constantly closed brake gears of rear wheels.

Spring actuation, hydraulic control.

Auxiliary brake — electrodynamic braking by traction electric motors in alternator mode with forced cooling of brake resistors.

Emergency brake — parking brake and operable circuit of service brakes are used.

Brake resistors Grid box 2x600 of power 1200 kW

Weight

Maximum payload capacity, kg		90000
Unladen weight, kg		74000
Gross weight, kg		164000
Weight distribution on axles, %:		
	unloaded	loaded
front	50.9	33.0
rear	49.1	67.0

Refill capacities, l

Fuel tank	1105
Engine cooling system	380
Engine lubrication system	140
Hydraulic system	405
Motor-in-wheel reduction gears	92 (46x2)
Suspension cylinders:	
-front	30.8 (15.4x2)
-rear	58.6 (29.3x2)

Cab

Two-seat two-door cab with air-sprung adjustable seat for driver, additional seat for passenger and adjustable steering column. The cab meets requirements of ROPS safety system and requirements of EN 474-1 and STB EN 474-6 standards for in-cab noise, vibration, concentration of harmful substances and dust. In-cab noise level is not more than 80 dB(A).

Traction and braking performance

Traction performance

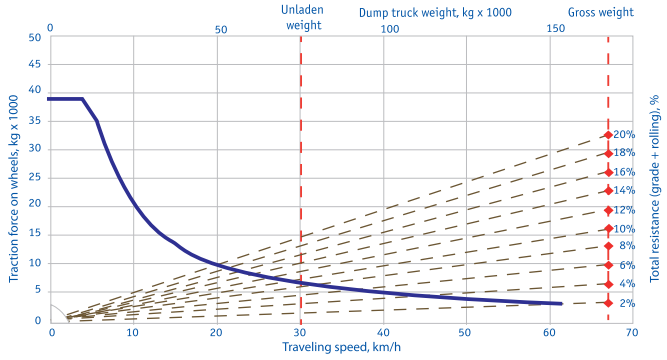

Braking performance

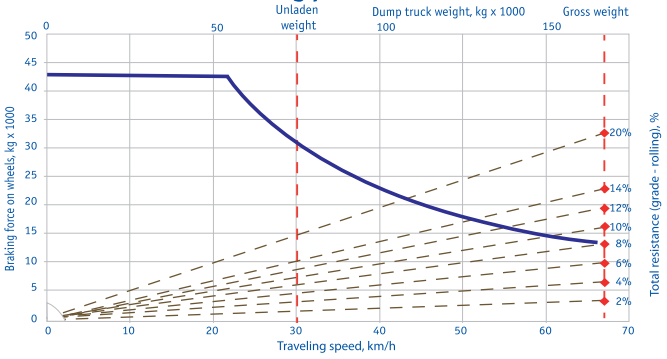

Special equipment

Combined fire-fighting system with remote actuation (standard)
Starting preheater (standard)**
Centralized lubrication system (standard)
Heating and conditioning unit (standard)
Fuel and loading control system (standard)
Video observation system (standard)
Telemetering tire pressure control system (standard)
High-voltage line attention device (standard)
Fettling of body floor (option)

Overall dimensions, mm*

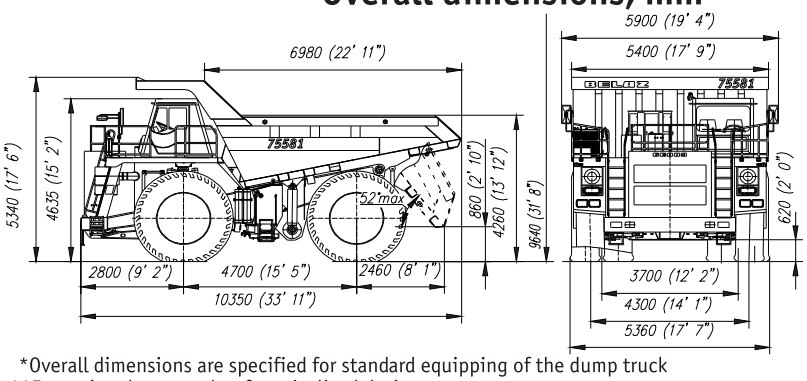

*Overall dimensions are specified for standard equipping of the dump truck
**Excepting dump trucks of tropicalized design

OJSC "BELAZ" — Management Company of Holding "BELAZ-HOLDING"
40 let Oktyabrya str. 4, 222160, Zhodino, Minsk region, Republic of Belarus
phone: (+3751775) 3-27-82, 3-26-23, 3-37-37 fax: (+375 1775) 7-01-37
e-mail: office@belaz.minsk.by, marketing@belaz.minsk.by,
export@belaz.minsk.by
www.belaz.by